HS Target C

Domain, Target, Standards, DOK, Vertical Alignments, Achievement Levels, Evidence Required, Vocabulary, Response Types, Materials, Attributes, Question Types, and Question Banks (Examples)

Content Domain: Number and Quantity
Target C [s]: N-Q.A Reason quantitatively and use units to solve problems.
Standards included in Target C: N-Q.A, N-Q.A.1
Vertical Alignment
Achievement Level Descriptors
Evidence Required
Vocabulary
Response Types
Materials
Attributes
Claim 1: Concepts and Procedures (DOK 1, 2) Question Banks
Claim 2 Problem Solving Questions Banks
Claim 3 Communicating Reasoning Question Banks
Claim 4 Modeling and Data Analysis Question Banks

Content Domain: Number and Quantity

Target C [s]: N-Q.A Reason quantitatively and use units to solve problems.

Standards included in Target C: N-Q.A, N-Q.A.1

N-Q.A Reason quantitatively and use units to solve problems.

N-Q.A.1 Use units as a way to understand problems and to guide the solution of multi-step problems; choose and interpret units consistently in formulas; choose and interpret the scale and the origin in graphs and data displays.

Vertical Alignment

Related Grade 8 standards

8.EE.A Work with radicals and integer exponents.

8.EE.A.3 Use numbers expressed in the form of a single digit times an integer power of 10 to estimate very large or very small quantities, and to express how many times as much one is than the other. For example, estimate the population of the United States as 3 × 108 and the population of the world as 7 × 109, and determine that the world population is more than 20 times larger.

8.EE.A.4 Perform operations with numbers expressed in scientific notation, including problems where both decimal and scientific notation are used. Use scientific notation and choose units of appropriate size for measurements of very large or very small quantities (e.g., use millimeters per year for seafloor spreading). Interpret scientific notation that has been generated by technology.

Achievement Level Descriptors

Level 1 Students should be able to choose the units in a formula, correctly scale a graph with unit increments, and identify a quantity from a graph with a scale in unit increments of a specified measurement.

Level 2 Students should be able to reason quantitatively to choose and interpret the units in a formula given in a familiar context, including making measurement conversions between simple units and identifying a quantity from a graph with the scale in increments of various sizes. They should be able to use units to guide the solution of a familiar multi-step problem with scaffolding.

Level 3 Students should be able to reason quantitatively to choose and interpret the units in a formula given in an unfamiliar context, including making measurement conversions between compound units, and to define appropriate quantities or measurements in familiar contexts with some scaffolding to construct a model. They should be able to identify appropriate levels of measurement precision in context and to choose and interpret the scale and origin of a graph or data display. They should be able to use units to guide the solution of an unfamiliar multi-step problem without scaffolding.

Level 4 Students should be able to define appropriate quantities or measurements in unfamiliar contexts with little to no scaffolding to construct a model.

Evidence Required

1. The student chooses units consistently in formulas.

2. The student chooses the scales for graphs and data displays.

3. The student chooses appropriate quantities for answering a question in a real-world context.

Vocabulary
square units, cubic units, unit conversion, axis scale

Response Types
Multiple Choice, single correct response; Multiple Choice, multiple correct response; Drag and Drop; Matching Table

Materials
unit conversions, blank coordinate planes, graphs in the coordinate plane, bar graphs, histograms, table of values

These pages were adapted from open source documents available on the Smarter Balanced Website: http://www.smarterbalanced.org/assessments/development/ August 2016

Attributes
none

Claim 1: Concepts and Procedures (DOK 1, 2) Question Banks
Students can explain and apply mathematical concepts and carry out mathematical procedures with precision and fluency.

Claim 1 N-Q.A.1 DOK Level 1

Use units as a way to understand problems and to guide the solution of multi-step problems; choose and interpret units consistently in formulas; choose and interpret the scale and the origin in graphs and data displays.

Evidence Required
The student chooses units consistently in formulas.

Question Type 1: The student is presented with a formula that uses measurements given in different units.

1. Given the formula, $K = \frac{1}{2}mv^2$ where

    - K represents kinetic energy,
    - m represents mass and has units of kilograms (kg), and
    - v represents velocity and has units of meters per second (m/s).

Select an appropriate measurement unit for kinetic energy.

A. $\frac{kg\ m^2}{s}$

B. $\frac{kg^2\ m^2}{s^2}$

C. $\frac{kg\ m}{s^2}$

D. $\frac{kg\ m^2}{s^2}$

Rubric: (1 point) Student selects the correct response (e.g., D).

Response Type: Multiple Choice, single correct response

Question Type 2: The student is presented with a context in which a number needs to be expressed in a different unit.

1. The density of water at a certain temperature is 62.4 $\frac{lb}{ft^3}$.

Drag a rate or quantity from the box to each blank to calculate the density of water in units of kilograms per cubic meter, $\frac{kg}{m^3}$.

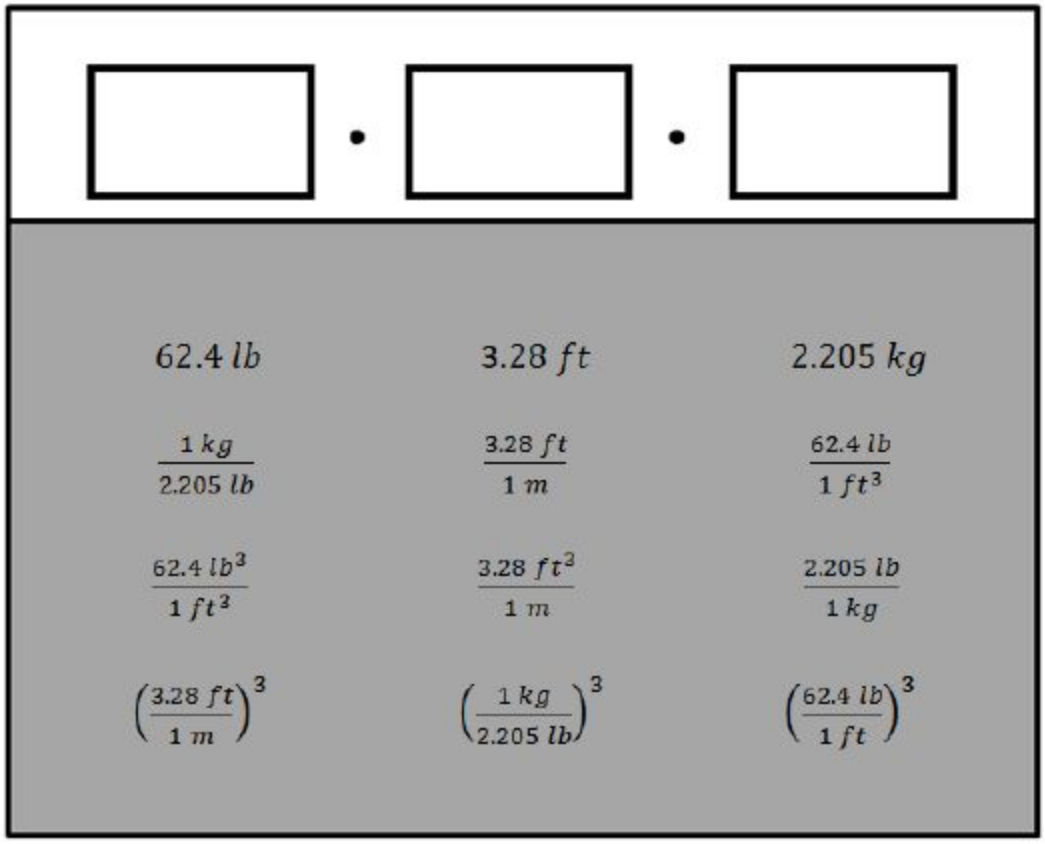

Rubric: (1 point) The student chooses the following correct three rates or quantities (order does not matter): $\frac{62.4\ lb}{1\ ft^3}$, $(\frac{3.28\ ft}{1\ m})^3$, $\frac{1\ kg}{2.205\ lb}$
One such ordering would be: $\frac{62.4\ lb}{1\ ft^3} \bullet (\frac{3.28\ ft}{1\ m})^3 \bullet \frac{1\ kg}{2.205\ lb}$.

Response Type: Drag and Drop

Claim 1 N-Q.A.1 DOK Level 2

These pages were adapted from open source documents available on the Smarter Balanced Website: http://www.smarterbalanced.org/assessments/development/ August 2016

Use units as a way to understand problems and to guide the solution of multi-step problems; choose and interpret units consistently in formulas; choose and interpret the scale and the origin in graphs and data displays.

Evidence Required:
The student chooses the scales for graphs and data displays.

Question Type 1: The student is presented with a contextual situation where the equation for the function may or may not be given.

1. A company makes 3,000 liters of juice per day. Let y represent the total amount of juice, in liters, made in x days.

An equation representing this situation is entered into a graphing calculator. Determine whether a graph created with each calculator display window defined in the table will show all points representing the total amount of juice made in 0 to 7 days.

Select Yes or No for each display window.

The calculator display window shows:	Yes	No
$-100 \leq x \leq 3{,}100$ and $-1 \leq y \leq 8$		
$-1 \leq x \leq 8$ and $-100 \leq y \leq 3{,}100$		
$-1 \leq x \leq 8$ and $-100 \leq y \leq 21{,}100$		
$-100 \leq x \leq 21{,}100$ and $-100 \leq y \leq 3{,}100$		

Rubric: (1 point) The student selects the correct response for each display window (e.g., NNYN).

Response Type: Matching Tables

Claim 1 N-Q.A.1 DOK Level 1
Use units as a way to understand problems and to guide the solution of multi-step problems; choose and interpret units consistently in formulas; choose and interpret the scale and the origin in graphs and data displays.

Evidence Required:
The student chooses the scales for graphs and data displays.

Question Type 1: The student is presented with a contextual situation and a graph of the situation.

1. The speed of sound at sea level is approximately 340 meters per second. The graph shows the distance, d, a sound wave created by a loud noise at sea level has traveled after t seconds.

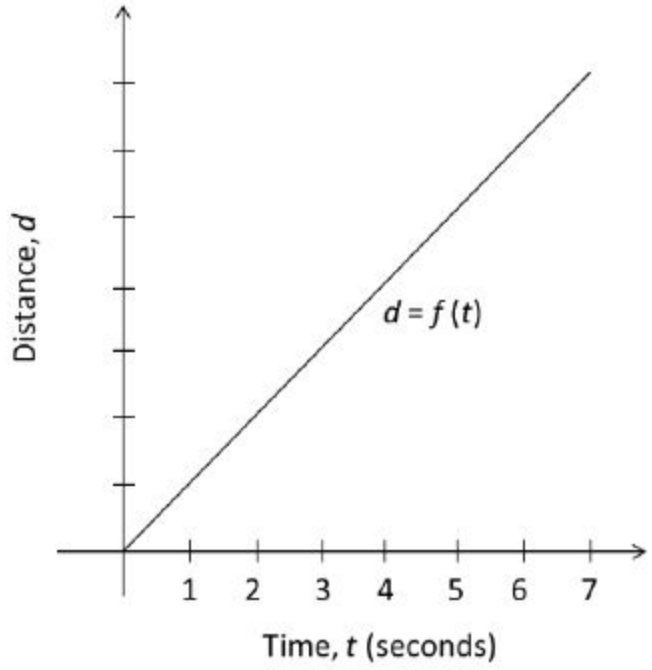

Each of the following sets of numbers represents meters. Assuming the graph is correct, which set of numbers is most appropriate to label the seven tick marks along the vertical axis (distance)?

A. 1, 2, 3, 4, 5, 6, 7
B. 50, 100, 150, 200, 250, 300, 350
C. 100, 200, 300, 400, 500, 600, 700
D. 340, 680, 1020, 1360, 1700, 2040, 2380

Rubric: (1 point) The student selects the correct list of numbers (e.g., D).

Response Type: Multiple Choice, single correct response

Claim 1 N-Q.A.1 DOK Level 1
Use units as a way to understand problems and to guide the solution of multi-step problems; choose and interpret units consistently in formulas; choose and interpret the scale and the origin in graphs and data displays.

Evidence Required:
The student chooses the scales for graphs and data displays.

Question Type 1: The student chooses appropriate quantities for answering a question in a real-world context.

1. A farmer is comparing costs for different fertilizers to use on her 45-acre field. Different

brands of fertilizer come in different sizes that cover different areas of land.

Choose two or more quantities that, when multiplied together, would give a quantity that could be used as a single measure to decide which fertilizer would be least expensive for her to use on her field.

A. The cost per bag of fertilizer in dollars
B. The cost per cubic foot of fertilizer in dollars
C. The volume of each bag of fertilizer in cubic feet
D. The number of bags needed to fertilize one acre
E. The number of acres a bag of fertilizer can cover

Rubric: (1 point) The student selects the correct combination of options (e.g., A and D or B, C, and D).

Response Type: Multiple Choice, multiple correct response

Claim 2 Problem Solving Questions Banks

Claim Descriptors and Targets

Students can solve a range of complex well-posed problems in pure and applied mathematics, making productive use of knowledge and problem-solving strategies.

Example 1

A company that makes rectangular baking pans labels each pan with the dimensions, in inches, and the capacity in quarts. A company employee needs to label a rectangular pan with dimensions 7 inches by 11 inches by 2 inches.

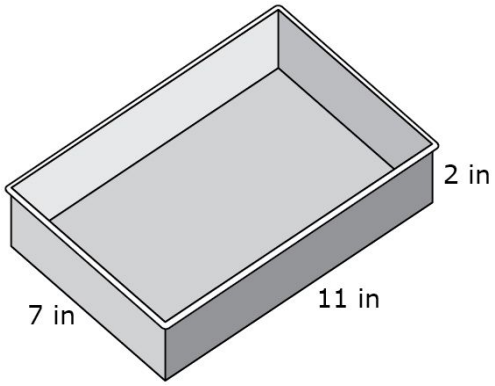

1 quart = 57.75 cubic inches

What is the capacity, in quarts, of this pan? Round your answer to the nearest tenth.

Rubric: (1 point) The student correctly determines that the capacity in quarts of the pan (e.g., accept 2.66 - 2.7).

These pages were adapted from open source documents available on the Smarter Balanced Website: http://www.smarterbalanced.org/assessments/development/ August 2016

Response Type: Equation/Numeric

Claim 3 Communicating Reasoning Question Banks

Claim Descriptors and Targets

Students can clearly and precisely construct viable arguments to support their own reasoning and to critique the reasoning of others.

Example 1

- 1 kilometer = 100 meters
- 1 mile ≈ 1.6 kilometers

Calvin biked 24 miles in 2 hours. What is his approximate average speed in meters per minute?

Explain or show clear steps for how you determined your answer.

Rubric: (2 points) The student enters the correct numeric value in the response (32) and enters a coherent, complete explanation or sequence of computations that shows where this comes from (see Examples). (1 point) The student enters the correct numeric value in the response but does not provide a coherent explanation OR the student enters a different number in the response but includes an explanation that shows an understanding of how the answer could be found, but with some computational errors or a small misstep in reasoning.

Rubric Example 1

24 miles in 2 hours is 12 mi/hr.
12 mi/hr * 60 min/hr = 1/5 mi/min.
1 km is 100 meters and 1 mile is 1.6 km, so 1 mile is 160 meters.
1/5 mi/min *160 m/mi = 32 meters per minute.

Rubric Example 2

Going 24 miles in 2 hours is the same as going 12 miles per hour.
There are 100 meters in a km and 1.6 km in a mile, so there are 160 m in a mile. There are 60 minutes in an hour.
1 mile per hour is 160 meters per 60 minutes which is 8/3 meters per minute, so 12 miles per hour is 12*8/3=32 meters per minute.

Response Type: Short Text

Example 2

Sherry wants to enlarge a photograph to 300% of its original size. The machine she is using can only make enlargements for the following percentages: 100%, 125%, 150%, and 200%. Sherry thinks that she should enlarge the photograph by 100% and then by 200% to get a total enlargement of 300%.

Decide if Sherry is correct. If Sherry is correct, drag the 100 and 200 from the palette into the first two answer spaces.

If Sherry is incorrect, drag a sequence of enlargements she can use to get a total enlargement of 300%.

Each enlargement percentage may be used more than once. If a sequence is not needed, leave the box blank.

%	Sequence of Enlargements
100	1: ☐ %
125	2: ☐ %
	3: ☐ %
150	4: ☐ %
200	5: ☐ %

Rubric: The student drags the percentages into the appropriate boxes to show Sherry is incorrect (e.g., 200, 150. Other correct responses are possible).

Response Type: Drag and Drop

Claim 4 Modeling and Data Analysis Question Banks

Claim Descriptors and Targets

Students can analyze complex, real-world scenarios and can construct and use mathematical models to interpret and solve problems.

Example 1

Bear Lake straddles the border between Idaho and Utah. It is about 30 kilometers (km) long and about 11 km wide at the widest spot, as shown in the figure. The water is about 60 meters

(m) deep at the deepest spot with an average depth of about 30 m. Use this information to estimate the number of liters (l) of water in Bear Lake.
[Click here for more information if you need it.]

Part A: Enter your estimate in the response box using scientific notation.

Part B: The surface area of Bear Lake is approximately 280 km2. Use this information to improve your estimate of the number of liters contained in the lake if you can.

Enter your revised estimate in the response box using scientific notation.

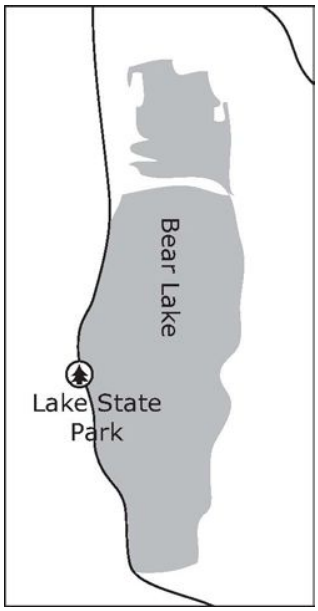

Interaction: The student can reveal the following list of conversions: 1 km = 1000 m 1 cm3 = 1 ml 1 m = 100 cm 1 l = 1000 ml 1 cm = 10 mm

The student must enter an answer in the first response box before seeing the second response box.

Rubric: (2 points) The student enters a reasonable estimate for Part A for the number of liters in the lake in the first response box (any number between 4.95 × 1012 and 9.9 × 1012) and enters a more precise estimate for Part B that is closer to 8.4×1012. (1 point) The student enters a reasonable estimate for Part A but does not enter an improved estimate in the second box or the student enters an unreasonable estimate in the first response box and 8.4 × 1012 in the second response box.

Response Type: Equation/Numeric (2 response boxes)

Example 2

There is a traffic jam on a highway. A reporter is trying to estimate the number of vehicles involved in the traffic jam. Select all of the information that will help the reporter make a reasonable estimate of the number of vehicles in the traffic jam.

A. The cause of the traffic jam
B. The average length of a vehicle
C. The number of lanes on the highway
D. The average distance between vehicles
E. The average number of people in each vehicle
F. The distance from the beginning to the end of the traffic jam

Rubric: (1 point) Student selects B, C, D, and F.

Response Type: Multiple Choice, multiple correct response